MINOLTA AF ZOOM 35-105mm F3.5(22)-4.5 (2585-100)
MINOLTA MAXXUM AF ZOOM 35-105mm F3.5(22)-4.5 (2585-600)

Lens

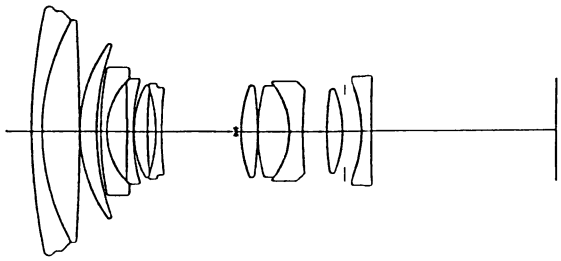

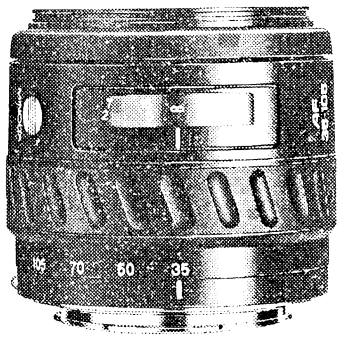

Construction : 12 elements in 10 groups

Type : 4-component mechanical-compensation zoom lens

Coating : Minolta Achromatic

Angle of view : 63°–23°

Lens mount : Minolta A mount

Diaphragm : Automatic preset diaphragm

Lens signal contact : 5 contacts

f No. : Maximum…WIDE 3.5
TELE 4.5
Minimum…WIDE 22
TELE 27
Full-stop setting…5.5 stops

Diaphragm : 7 blades

FOCUSING

Focusing : AF, FA, M

Type : Front-focusing

Minimum focusing distance : 1.2m

Distance scale : M –4 5 7 15 ∞ (ft)
0.855 1.2 1.5 2 5 (m)

Infrared correction scale : none

Macro capability
: 1/6.5 × (maximum magnification)
(AF, FA or M mode is usable.)

Depth-of-field scale : none

ZOOMING

Type : Mechanical-compensation zoom lens, Rotary 2-ring

Zooming scale : f 105 70 50 35

Zooming ratio : 3 ×

DIMENSIONS & WEIGHT

Dimensions : ϕ68.5 (maximum diameter) × 59.5 (maximum length) mm

Weight : 290g

Filter-thread diameter
: ϕ55mm (P=0.75)

Lens hood diameter
: ϕ55mm (Clip-on type)

ACCESSORIES

Lens case : LH-1032

Lens hood : 6554-810

Scan Copyright 2006, P.Ganzel

I N D E X

PART NO.	PAGE	PART NO.	PAGE
2585-0101	4	2585-1237	1
2585-0102	4	2585-1241	1
2585-0104	4	2585-1242	1
2585-0240	1	2585-1244	1
2585-0371	3	2585-1351	3
2585-0381	3	2585-1352	3
2585-0384	3	2585-1372	1
2585-0430	2	2585-1373	2
2585-0501	1	2551-1374	1
2585-0820	4	2585-1375	2
		2585-1377	2
2585-1103	4	2585-1379	2
2585-1105	4	2585-1380	1
2585-1106	4	2585-1382	2
2585-1112	3	2585-1383	3
2585-1113	3	2551-1385	1
2585-1230	2	2551-1386	1
2585-1231	3	2592-1387	2
2585-1233	3	2551-1387	1
2585-1234	4	2551-1388	1
2585-1236	2	2551-1389	1

Scan Copyright 2006, P.Ganzel

I N D E X

PART NO.	PAGE
2551-1391	1
2551-1392	1
2551-1393	1
2551-1394	1
2551-1395	1
2585-1396	4
2585-1397	4
2585-1398	4
2585-1399	4
2551-1402	1
2551-1420	1
2585-1421	4
2585-1422	4
2550-1424	1
2585-1425	3
2585-1428	2
2585-1429	2
2585-1433	1
2585-1436	1
2585-1437	1
2593-1438	1
2585-1438	2
2585-1440	3
2551-1444	1
2550-1446	1
2585-1460	3
2585-1461	3
2585-1462	3
2585-1463	3
2585-1464	3
2585-1465	3
2585-1466	3
2585-1467	3
2585-1468	3
2585-1481	3
2585-1482	3
2585-1641	1
2585-1806	4
2585-1807	4
2585-1808	4
2585-1812	4

Scan Copyright 2006, P.Ganzel

I N D E X

PART NO.	PAGE
9611-1422-07	1
9612-1640-07	3
9721-0200-00	1
9761-1730-07	2
9761-1735-07	3
9761-1735-15	1
9761-2050-04	1
9761-2055-07	2
9762-1745-07	3
9763-1740-07	1

Scan Copyright 2006, P.Ganzel

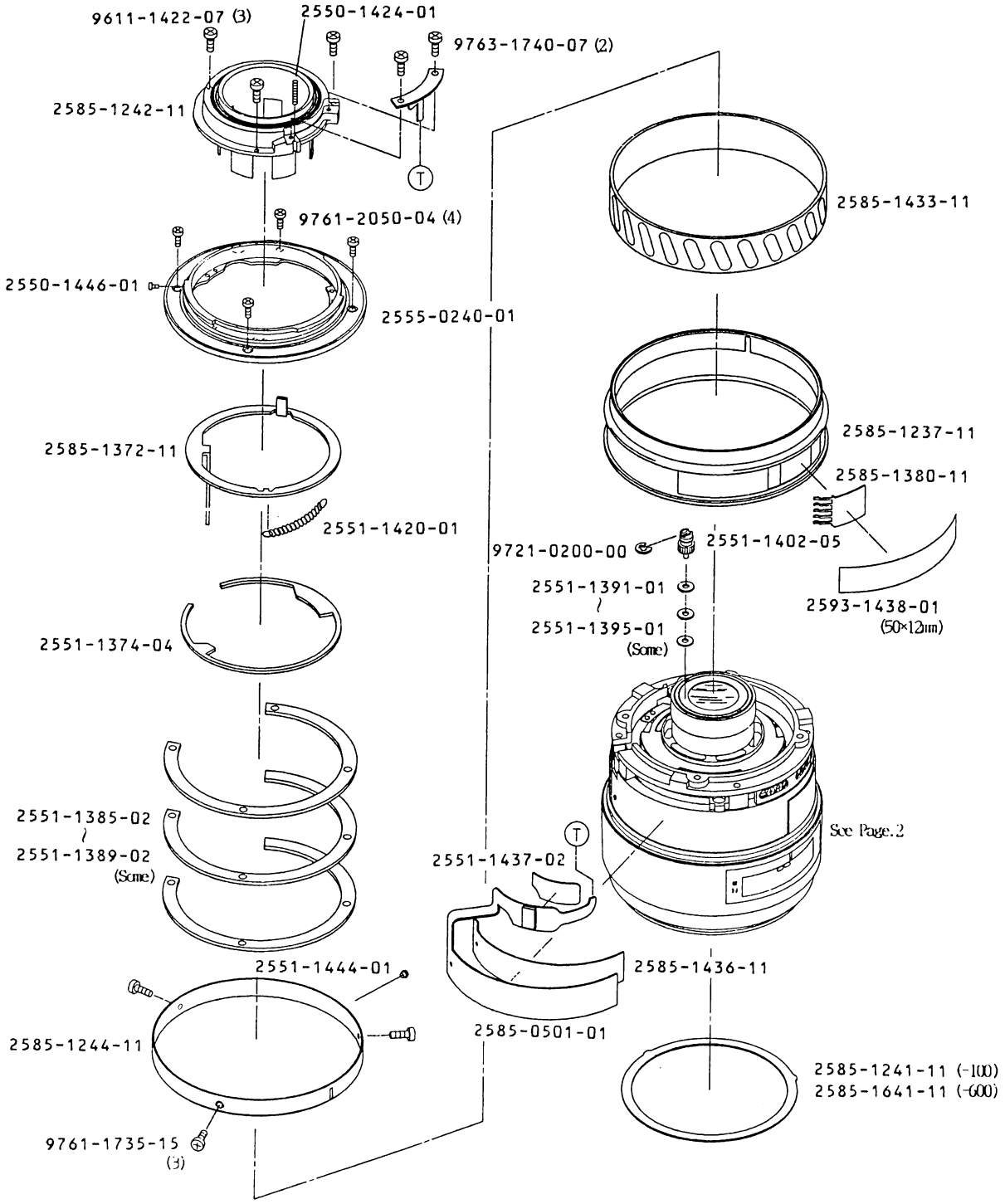

Scan Copyright 2006, P.Ganzel

2585 PARTS MODIFICATION LIST

1. 矢印（⟹, ⟸）は互換性を示しています。
   ・⟹○（×）--- 旧部品を新部品に交換しても良い（いけない）。
   ・×（○）⟸ --- 新部品を旧部品に交換してはいけない（良い）。
2. その部品単独の変更ではなく、関連変更部品がある場合は、表の縦の列で関連変更部品を示しています。
   ・表の最後の（⟹, ⟸）は、関連部品セットでの互換性を示しています。
3. 変更部品には通しNo.を付け、以後変更された場合には通しNo.に補助No.(-2,-3,‥)を付けて示します。
   修理情報がある場合は、サプリNo.を右上に示します。
4. 新設部品は部品名称を記載します。それ以外の部品名称はパーツリストを参照して下さい。

1. Arrows (⟹, ⟸) show parts interchangeability.
   ·⟹○ (×) ---- Previous part is (is not) replaceable by new one.
   ·× (○)⟸ ---- New part is not (is) replaceable by previous one.
2. When part is not replaceable as a single one, vertical column shows the related parts.
   ·Arrows (⟹, ⟸) at base of table show interchangeability of parts as a set.
3. Modified parts group is numbered serially. Serial number has auxiliary number(-2,-3,‥), which is renewed when modification is carried out. Supplementary information No., if any, is shown on the table.
4. Part name of newly added part is shown in the table. Refer to Parts List in Service Manual for other parts.

■ No.1 Parts List P.1

Previous	2585-1242-11	⟹○	×⟸	2585-1242-13	New
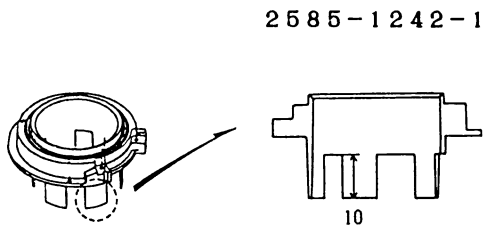			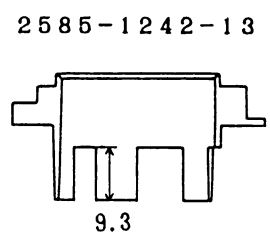		

Scan Copyright 2006, P.Ganzel

PART NO.	PART NAME		QTY.
2555-0240-01	BAYONET MOUNT SET	バヨネットマウントセット	1
2585-0501-01	FLEXIBLE P.C BOARD SET	フレキセット	1
2585-1237-11	ZOOM RING	ズーム操作環	1
2585-1241-11	NAME PLATE (FOR -100)	飾り板	1
2585-1242-11	LIGHT SHIELD RING	後遮光筒	1
2585-1244-11	ZOOM RING SET RING	ズーム環抜止めリング	1
2585-1372-11	PRESET RING	プリセットリング	1
2551-1374-04	PRESET RING PRESSURE	プリセットリング押え	1
2585-1380-11	BRUSH	ブラシ	1
2551-1385-02	BACK WASHER-A (T=0.05)	バックワッシャA	
2551-1386-02	BACK WASHER-B (T=0.07)	バックワッシャB	
2551-1387-02	BACK WASHER-C (T=0.1)	バックワッシャC	(Same)
2551-1388-02	BACK WASHER-D (T=0.2)	バックワッシャD	
2551-1389-02	BACK WASHER-E (T=0.5)	バックワッシャE	
2551-1391-01	COUPLER ADJUSTING WASHER-A (T=0.05)	調整ワッシャー	
2551-1392-01	COUPLER ADJUSTING WASHER-B (T=0.07)	調整ワッシャー	
2551-1393-01	COUPLER ADJUSTING WASHER-C (T=0.1)	調整ワッシャー	(Same)
2551-1394-01	COUPLER ADJUSTING WASHER-D (T=0.2)	調整ワッシャー	
2551-1395-01	COUPLER ADJUSTING WASHER-E (T=0.5)	調整ワッシャー	
2551-1402-05	COUPLER	カプラー	1
2551-1420-01	MAIN SPRING	メインスプリング	1
2550-1424-01	SPRING	アーススプリング	1
2585-1433-11	RUBBER RING	ズーム操作環ゴムリング	1
2585-1436-11	FLEXIBLE P.C BOARD SET TAPE A	フレキセットテープA	1
2551-1437-02	TAPE-B	テープ	1
2593-1438-01	TAPE (PER/ROLL)	補強テープ	1
2551-1444-01	BAYONET POINT	バヨネット標点	1
2550-1446-01	SCREW	ストッパービス	1
2585-1641-11	NAME PLATE (FOR -600)	飾り板	1
9611-1422-07	PHILLIPS TYPE SCREW	十字穴付なべ小ねじ	3
9721-0200-00	E-RING	Eリング	1
9761-1735-15	TAP TITE SCREW	十字穴付なべ頭タップタイトねじ	3
9761-2050-04	TAP TITE SCREW	十字穴付なべ頭タップタイトねじ	4

Scan Copyright 2006, P.Ganzel

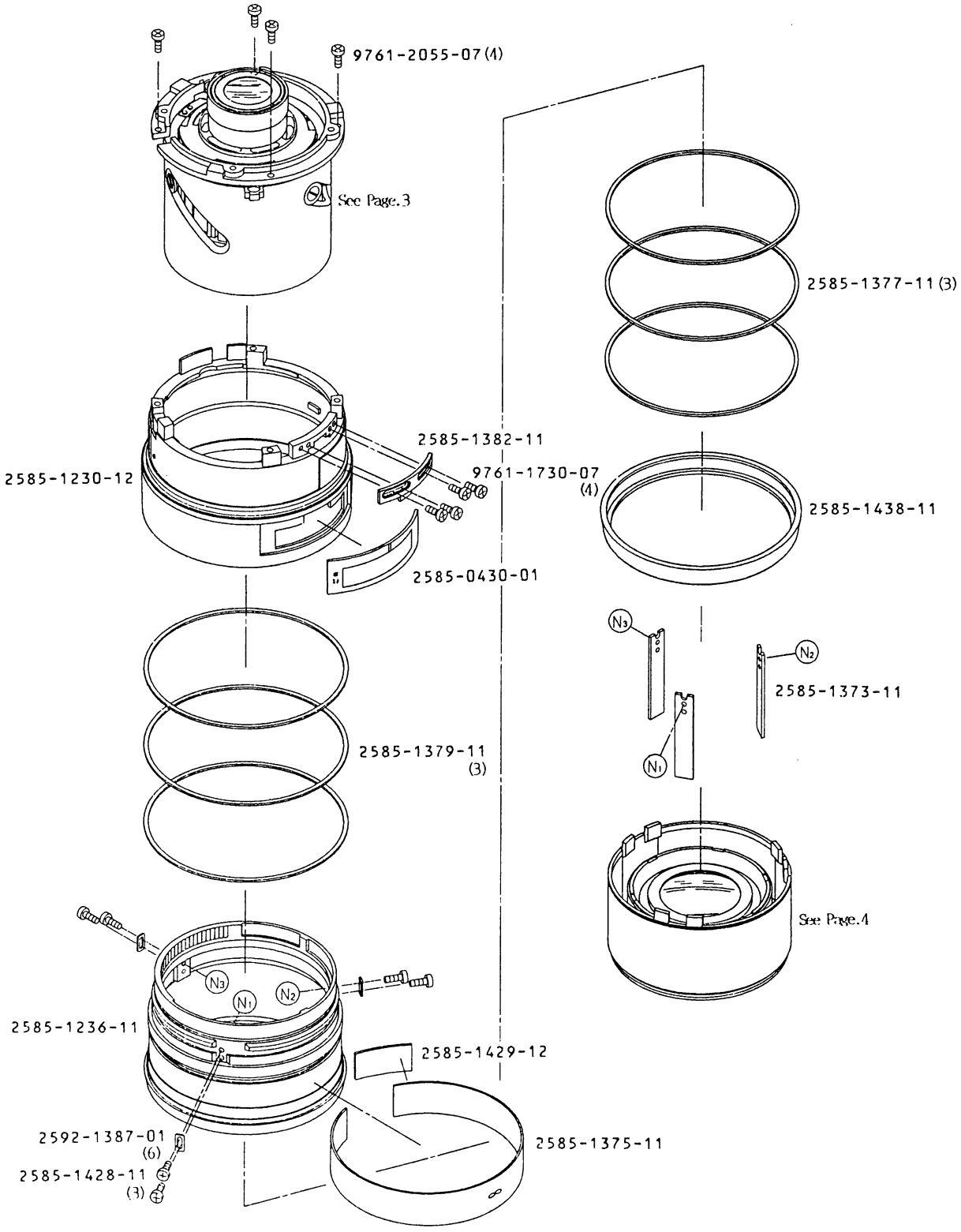

Scan Copyright 2006, P.Ganzel

PART NO.	PART NAME		QTY.
2585-0430-01	DISTANCE SCALE WINDOW SET	距離目窓窓セット	1
2585-1230-12	OUTER RING	固定保持環	1
2585-1236-11	FOCUSING RING	距離環	1
2585-1373-11	FOCUS GUIDE KEY	フォーカスガイドキー	3
2585-1375-11	DISTANCE SCALE PLATE	距離目盛板	1
2585-1377-11	RING	距離環補強板	3
2585-1379-11	RING	固定保持環補強板	3
2585-1382-11	FOCUSING RING STOPPER	距離環ストッパー	1
2592-1387-01	PRESSURE PLATE	押え板	3
2585-1428-11	SCREW	止めビス	6
2585-1429-12	DISTANCE SCALE PLATE SET TAPE	距離目盛板セットテープ	1
2585-1438-11	RUBBER RING	距離環ゴムリング	1
9761-1730-07	TAP TITE SCREW	十字穴付タップタイトねじ	4
9761-2055-07	TAP TITE SCREW	十字穴付なべ小ねじ	4

Scan Copyright 2006, P.Ganzel

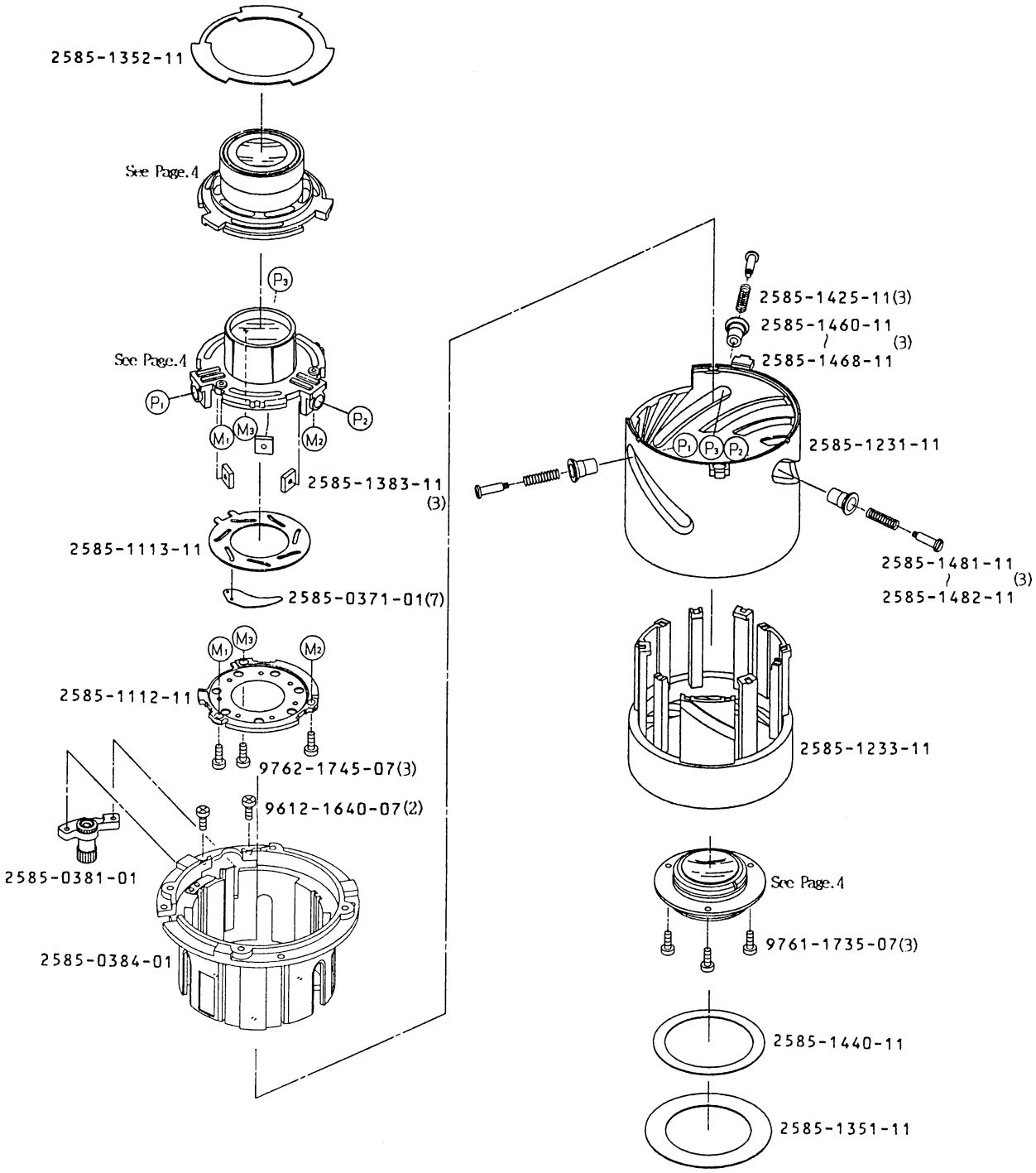

Scan Copyright 2006, P.Ganzel

PART NO.	PART NAME		QTY.
2585-0371-01	DIAPHRAM BLADE SET	絞り羽根セット	7
2585-0381-01	GEAR SET	ギヤセット	1
2585-0384-01	FIXED BARREL SET	固定筒セット	1
2585-1112-11	DIAPHRAGM PRESSURE PLATE	絞り押え環	1
2585-1113-11	DIAPHRAGM OPERATION RING	絞り操作環	1
2585-1231-11	ZOOM CAM RING	ズームカム環	1
2585-1233-11	1ST MOVING BARREL	第1群移動枠	1
2585-1351-11	2ND LIGHT SHIELD	第2遮光板	1
2585-1352-11	4TH LIGHT SHIELD PLATE	第4遮光板	1
2585-1383-11	GUIDE PIN SET PLATE	案内ピンセット板	3
2585-1425-11	GUIDE ROLLER SPRING	案内ローラースプリング	3
2585-1440-11	2ND LIGHT SHIELD SET TAPE	第2遮光板セットテープ	1
2585-1460-11	GUIDE ROLLER A (D1=4.43,D2=4.85)	案内ローラーA	3
2585-1461-11	GUIDE ROLLER B (D1=4.42,D2=4.85)	案内ローラーB	
2585-1462-11	GUIDE ROLLER C (D1=4.41,D2=4.85)	案内ローラーC	
2585-1463-11	GUIDE ROLLER D (D1=4.43,D2=4.84)	案内ローラーD	
2585-1464-11	GUIDE ROLLER E (D1=4.42 D2=4.84)	案内ローラーE	
2585-1465-11	GUIDE ROLLER F (D1=4.41 D2=4.84)	案内ローラーF	
2585-1466-11	GUIDE ROLLER G (D1=4.43 D2=4.83)	案内ローラーG	
2585-1467-11	GUIDE ROLLER H (D1=4.42 D2=4.83)	案内ローラーH	
2585-1468-11	GUIDE ROLLER I (D1=4.41 D2=4.83)	案内ローラーI	
2585-1481-11	GUIDE PIN A (D=2.4)	案内ピンA	3
2585-1482-11	GUIDE PIN B (D=2.39)	案内ピンB	
9612-1640-07	PHILLIPS TYPE SCREW	十字穴付なべ小ねじ	2
9761-1735-07	TAP TITE SCREW	十字穴付タップタイトねじ	3
9762-1745-07	TAP TITE SCREW	十字穴付タップタイトねじ	3

Scan Copyright 2006, P.Ganzel

■ When repairing following parts, must be checked resolving power by projection.

①: The influential lens element in the lens performance. (Number shows in order.)

Ⓐ: The influential lens group in the lens performance. (Influence: In alphabetical order)

■下記部品を修理した場合は、必ず投影解像力を確認して下さい。

①：レンズ性能によく影響するレンズ。（数字は順位を示す）

Ⓐ：レンズ性能によく影響するレンズ群。（影響度：アルファベット順）

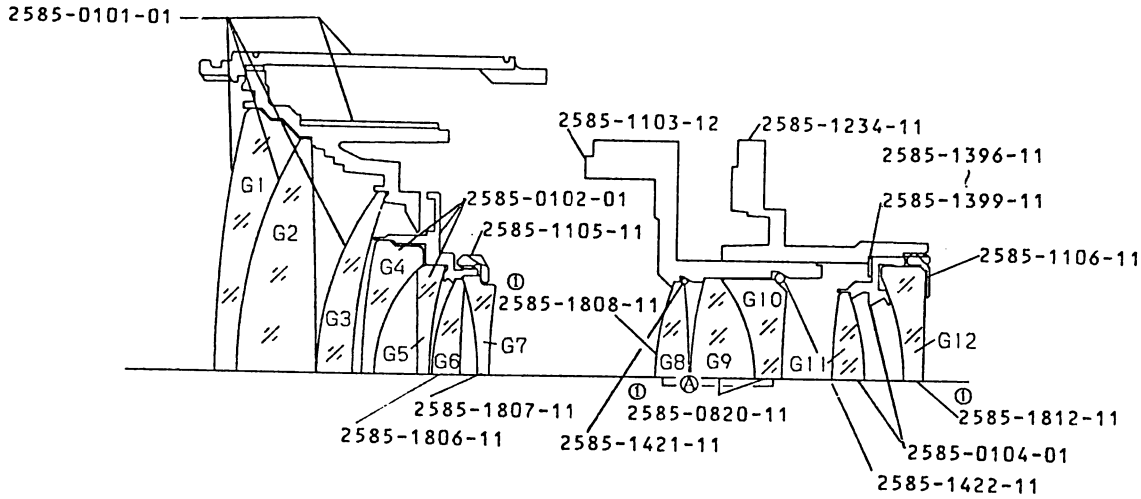

PART NO.	PART NAME		QTY.
2585-0101-01	FRONT LENS GROUP SET	前玉群セット	1
2585-0102-01	2ND LENS BARREL SET	第2群玉枠セット	1
2585-0104-01	4TH LENS BARREL SET	第4群玉枠セット	1
2585-0820-11	G9.10	G9．10	1
2585-1103-12	3RD LENS BARREL	第3群玉枠	1
2585-1105-11	G6.7 PRESSURE WASHER	G6．7押えワッシャー	1
2585-1106-11	G12 PRESSURE WASHER	G12押えワッシャー	1
2585-1234-11	4TH MOVING BARREL	第4群移動枠	1
2585-1396-11	ADJUSTING WASHER-A (T=0.05)	第3．第4間隔調整ワッシャーA	1
2585-1397-11	ADJUSTING WASHER-B (T=0.07)	第3．第4間隔調整ワッシャーB	
2585-1398-11	ADJUSTING WASHER-C (T=0.1)	第3．第4間隔調整ワッシャーC	
2585-1399-11	ADJUSTING WASHER-D (T=0.2)	第3．第4間隔調整ワッシャーD	
2585-1421-11	G8 PRESSURE SPRING	G8 押えスプリング	1
2585-1422-11	G10 PRESSURE SPRING	G10 押えスプリング	1
2585-1806-11	G6	G6	1
2585-1807-11	G7	G7	1
2585-1808-11	G8	G8	1
[illegible]	[illegible]	[illegible]	[illegible]

Scan Copyright 2006, P.Ganzel

REPAIR GUIDE

■The descriptive sequence in this Manual follows the assembly sequence. For disassembling, follows the reverse sequence.

—Symbol representation

[B] : Adhesive
[S] : Solvent
[A] : Anti-diffusion
[G] : Grease
[T] : Tool
■ : Points and general cautions in assembling

■Assembling and adjusting procedure

Page

[1]Zoom cam ring, 1st moving barrel, fixed barrel 1
[2]3rd moving barrel, guide roller, 4th moving barrel 2
[3]Lens mount, outer ring 3
■Preparation for adjustment of aperture diameter 3
■How to check aperture diameter 4
■Adjustment of aperture diameter 4
[4]2nd lens group block, outer ring set, front lens group set 5
■Outer ring, focusing ring 6
[5]Lens mount set, back washer, light shield ring, zoom ring 7
■Lens movement 8
■Circuit diagram and wiring diagram 9

■Precautions

- This lens uses many resin parts. Therefore, use liquid freon or alcohol for cleaning. Never use thinner, ketone, ether, etc.
- This lens uses MOS-IC. Therefore, special care must be exercised not to permit static electricity. To prevent static electricity, use a conductive mat without fail in repairing, as illustrated.
- Use PROGRAM PACK Ver.6.3 or new wer for Camera I/O Tester.

Scan Copyright 2006, P.Ganzel

Code No. 2585-100
Code No. 2585-600

1 Zoom cam ring, 1st moving barrel, fixed barrel

■Assemble up these in sequence of ①—②.

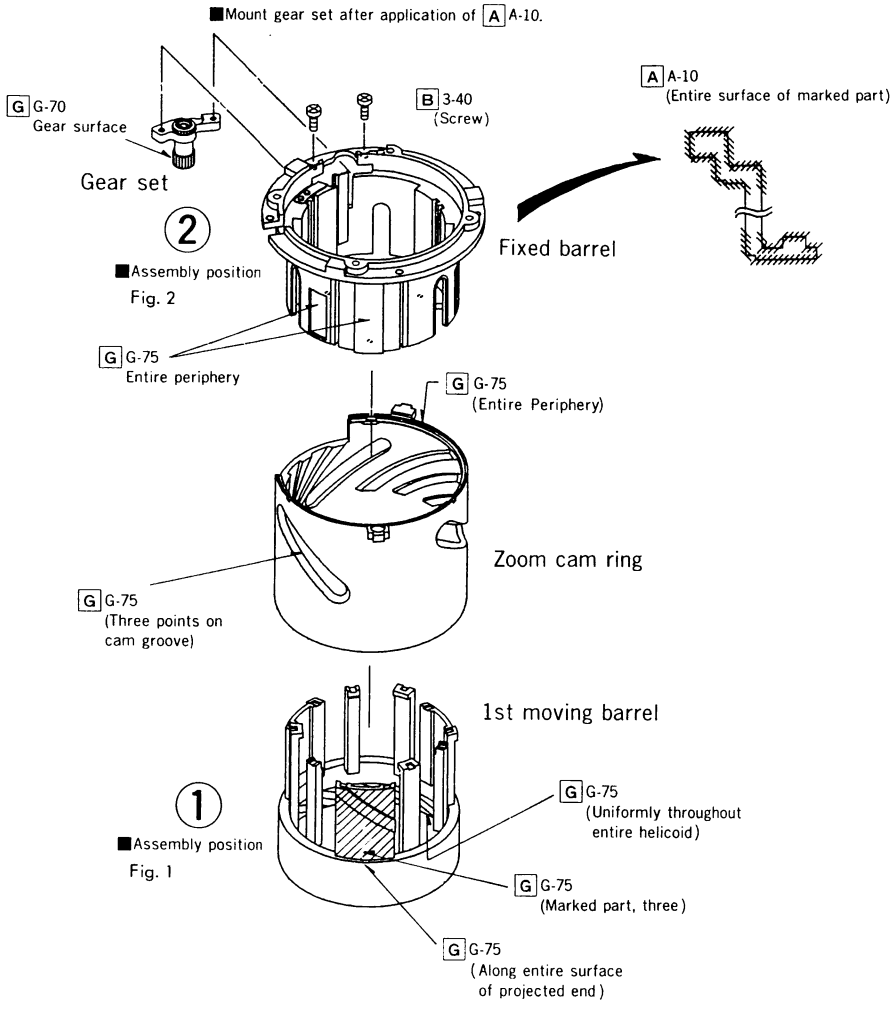

■Fig. 1

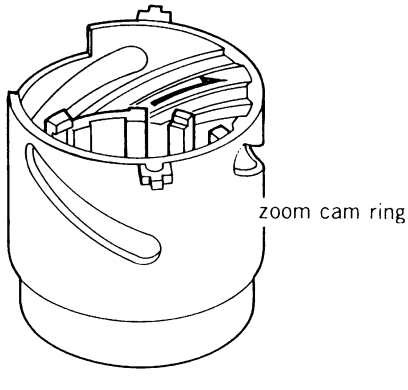

Assemble in perfect alignment of marked (→) part zone of zoom cam ring with the screwed portion of 1st moving barrel.

■Fig. 2

Fixed barrel
assembly position

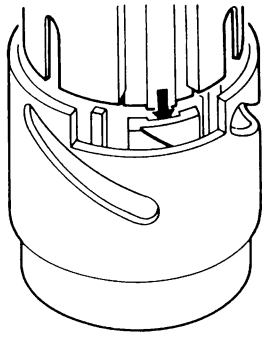

Scan Copyright 2006, P.Ganzel

2 3rd moving barrel, guide roller, 4th moving barrel

■Assemble up these in sequence of ①—④.

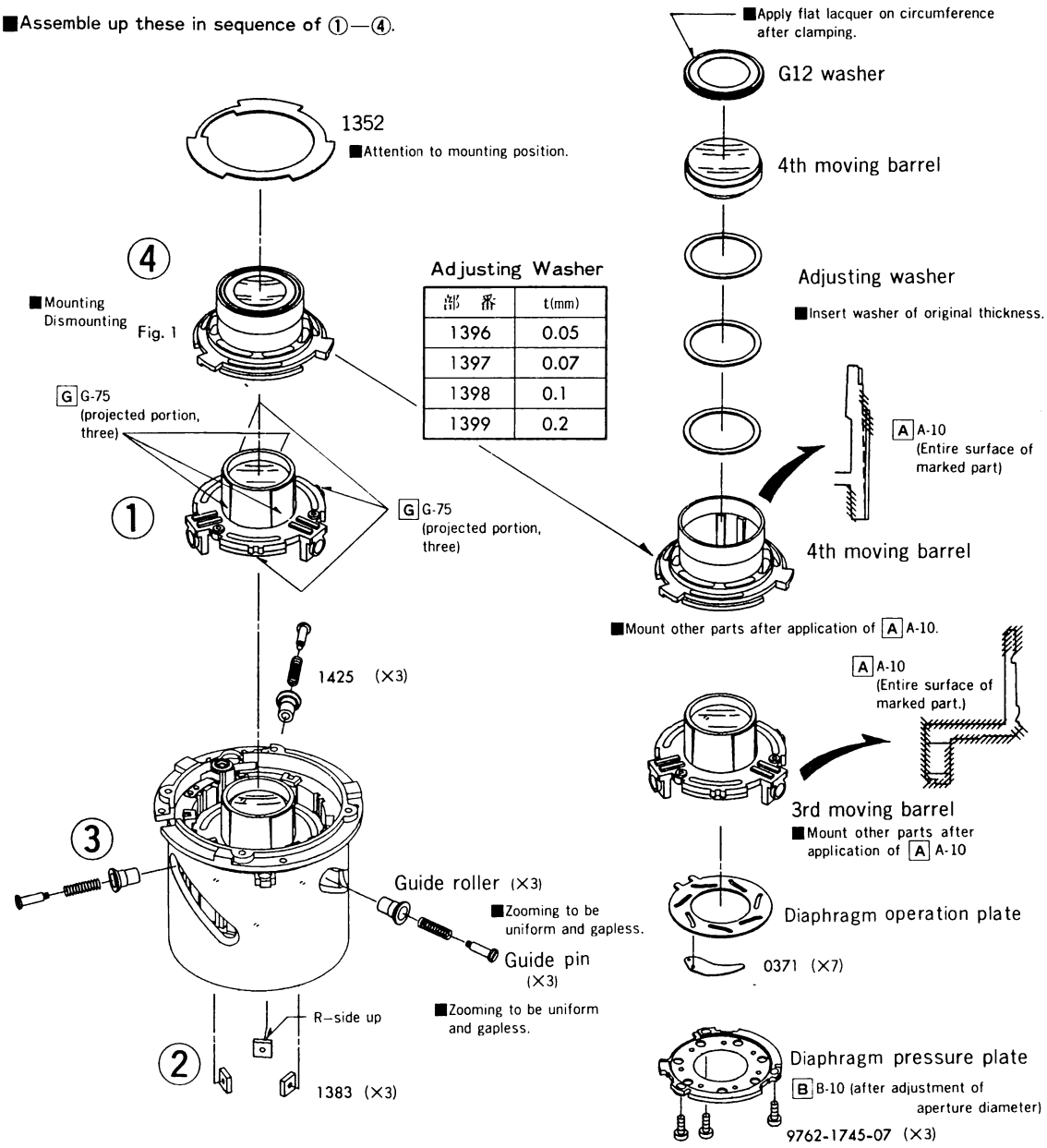

■Adjusting Washer

部番	t(mm)
1396	0.05
1397	0.07
1398	0.1
1399	0.2

■Guide roller

	部番	D_1 (mm)	D_2 (mm)
	1460	4.43	4.85
	1461	4.42	
	1462	4.41	
	1463	4.43	4.84
	1464	4.42	
	1465	4.41	
	1466	4.43	4.83
	1467	4.42	
	1468	4.41	

■Guide pin

部番	D(mm)
1481	2.4
1482	2.39

■Fig. 1

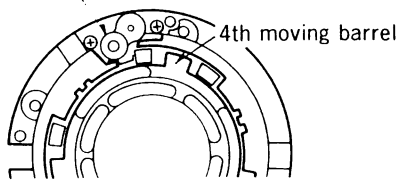

How to mount

Turn 4th moving barrel counter lockwise while taking it up a little, with its projected portion (narrower side) positioned as illustrated, till it comes onto A-portion.

How to demount

Scan Copyright 2006, P.Ganzel

3 Lens mount, outer ring

■Preparation for Adjustment of aperture diameter

■Preassemble up these in sequence of ①—③.

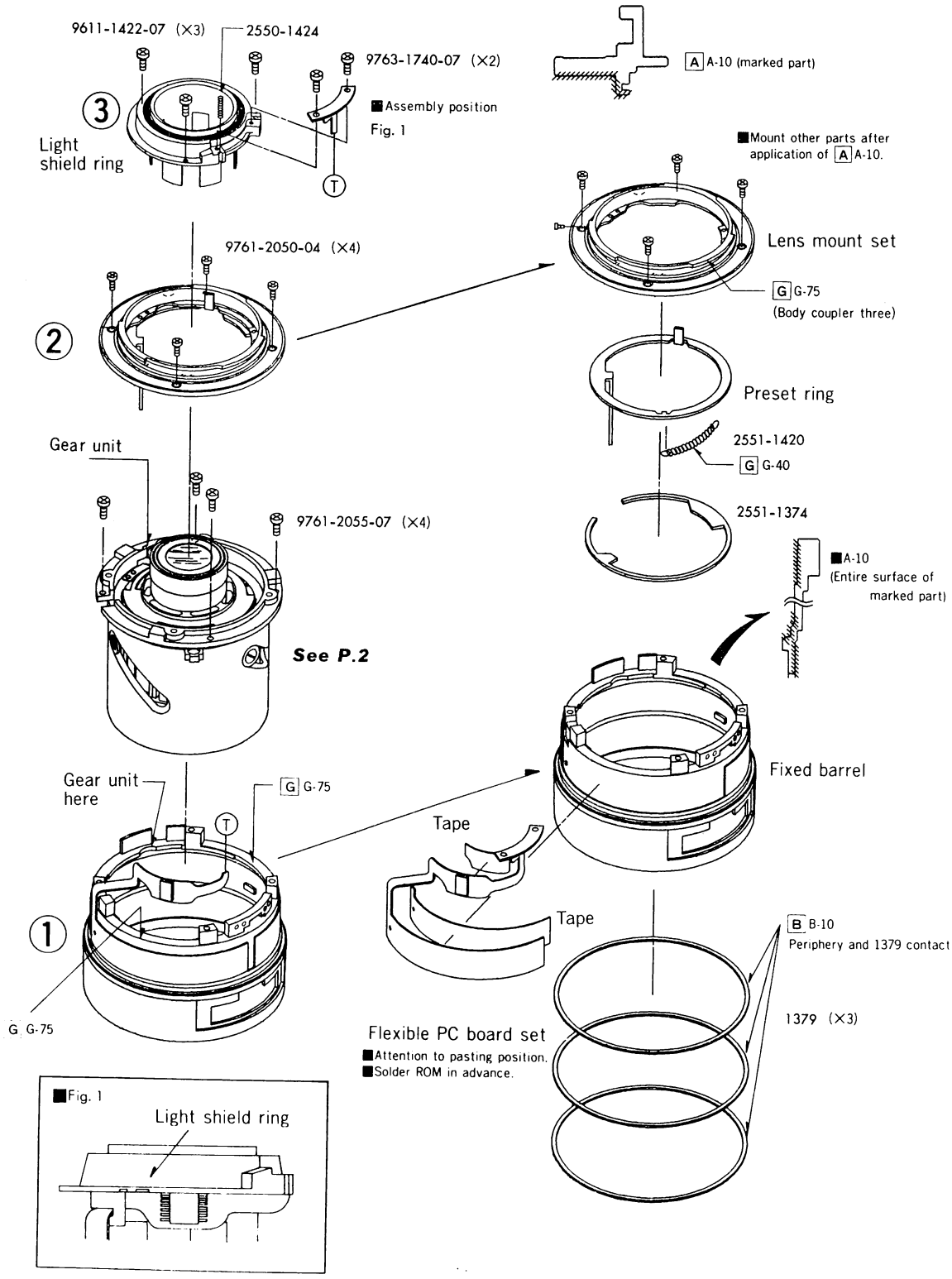

Scan Copyright 2006, P.Ganzel

How to check aperture diameter

"General Checking and Adjusting Procedure" cannot be applied to this aperture diameter checking because of its lens different from general A-lens. Therefore, follow the procedure given below for this checking operation.

Measuring instruments/materials
: Luminance source (Model L-2101, *L-222, *L-223)
: EE tester (Model EE-2101, EE-2111)
: Body 35mm receptor
: Reference camera body (Select it referring to P.9 of "general checking & adjusting procedure".)
*-mark : showing discontinued models.

Preparations

1. Set the measuring instruments and materials as illustrated below.

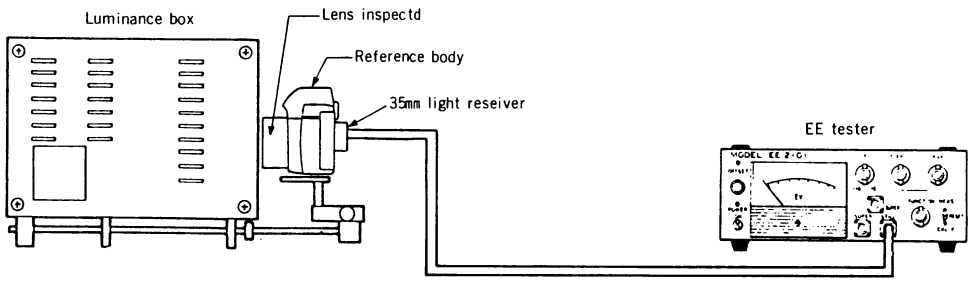

- **Luminance box**
  K-value : 1.2
  Luminance : EV11
- **Lens inspected**
  Focusing ring : ∞(Infinite)
  Zoom ring : 35mm
- **Reference body**
  Mode : M
  S.S. : Bulb
  Aperture : F11
  Focus mode : M
- **EE tester**
  Function : 35
  ASA : F
  K-value : 1.2
  MEAS-CALF : CALF
  F : 11

How to check

1. Release shutter several times and read the average of indicated values.
2. Calculate aperture error to check whether or not it is within the allowable value.

Average of indicated values	−	Error in standard body	=	Aperture error

Allowable value
(0±0.4) EV

(For error in standard camera body, refer to "General Checking & Adjusting Procedure, page.9).

Adjustment of aperture diameter

For deviation from above allowable value

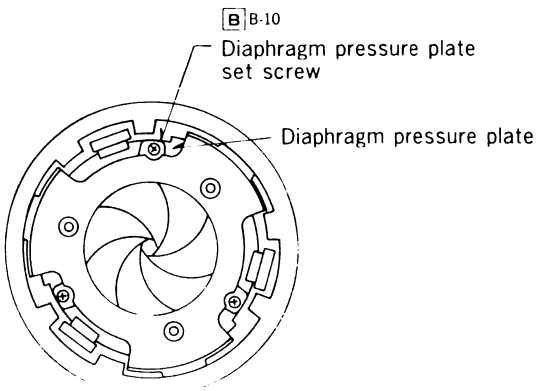

1. Loosen diaphragm pressure plate set screw and adjust the position of diaphragm pressure plate so that allowable aperture diameter is achieved.
2. Temporarily tighten diaphragm pressure plate set screw and check aperture diameter.
3. After checking that aperture diameter is within the allowable value, finally tighten diaphragm pressure plate set screw. (Don't tighten it with too high torque.)
   After that, apply adhesive B B-10.

Scan Copyright 2006, P.Ganzel

4 2nd lens group block, other ring set, front lens group set

1. Mount 2nd lens barrel set on zoom cam ring.
2. Mount front lens group set onto fixed barrel and set it with 0.85m distance.
3. Assemble-in both helicoid of front lens group set and zoom cam ring. (Fig.1)

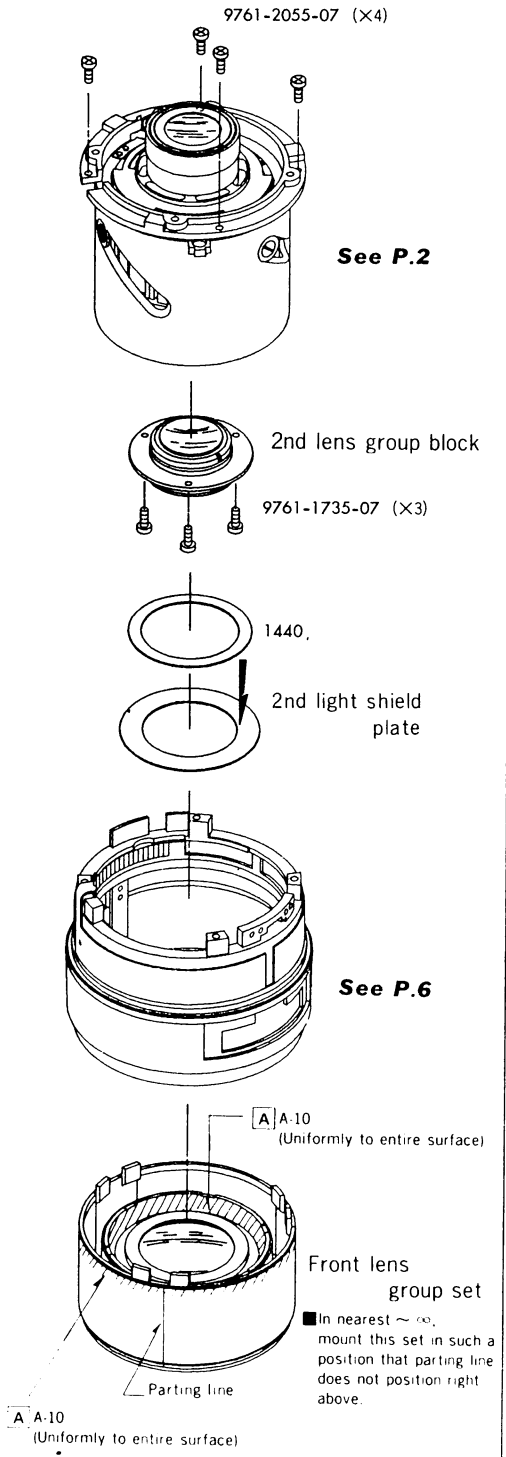

■Fig. 1

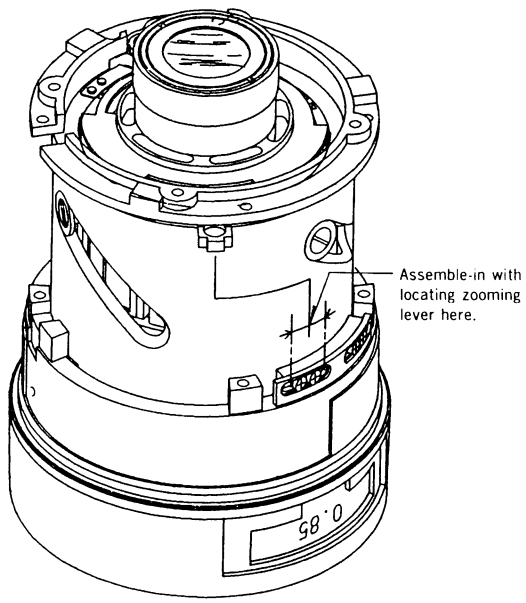

To assemble helicoid of front lens groupt set, turn zoom ring set clockwise while holding front lens group set.

After mounting:

distance ring shall rotate smoothly 0.85m-∞.
Front lens group set shall not come off when zoomed to 105mm side.

Scan Copyright 2006, P.Ganzel

■Outer ring, focusing ring

■After mounting assembled outer ring on to focusing ring, temporarily set focusing ring stopper.

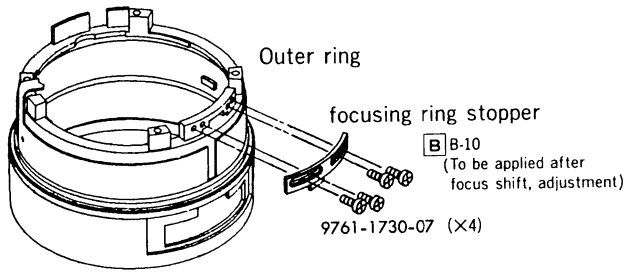

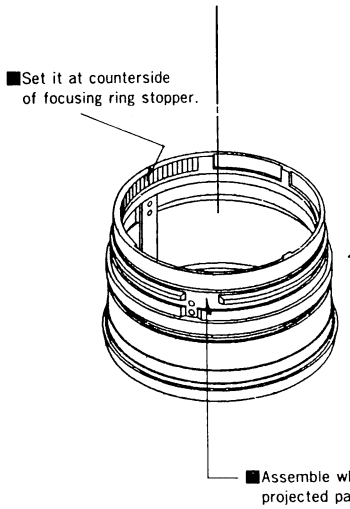

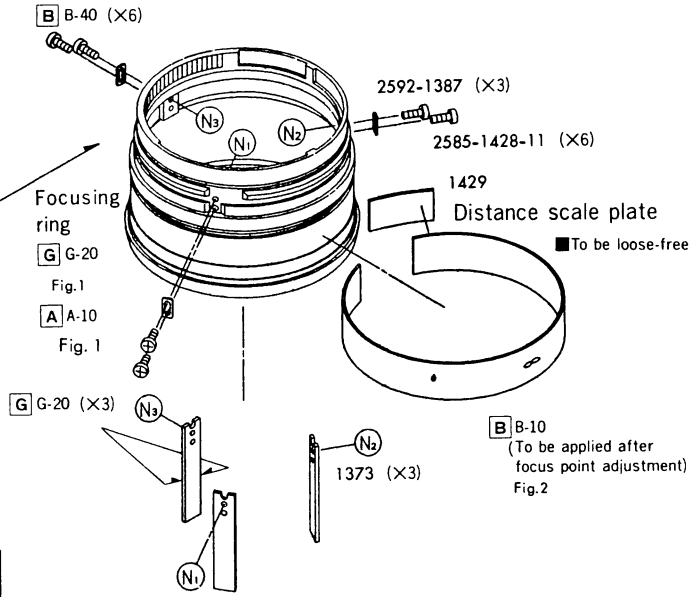

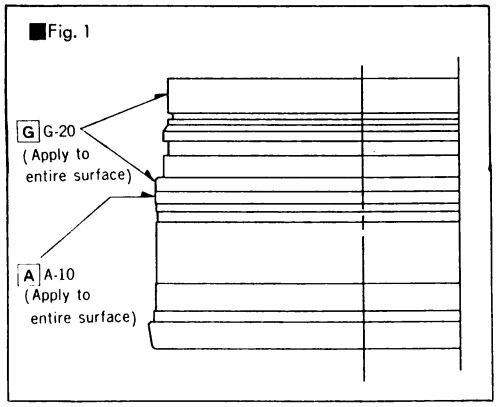

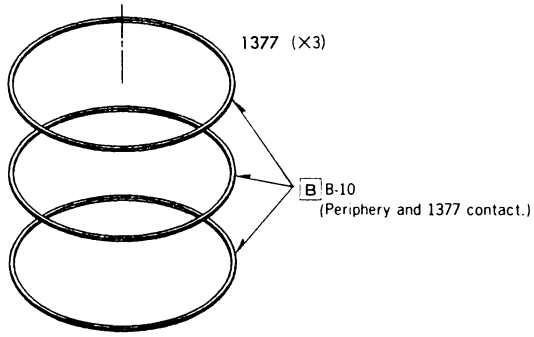

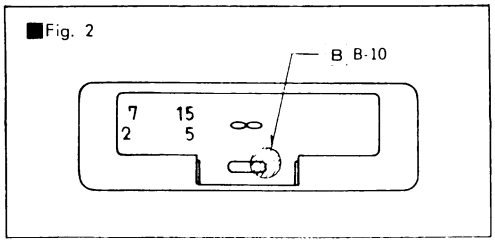

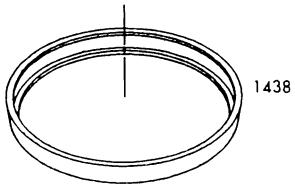

Scan Copyright 2006, P.Ganzel

5 Lens mount set, back washer, light shield ring, zoom ring

■Disassemble these in sequence of ❶—❽.
■After assembling ①—③, perform focus shift and adjustment flange back (with reference to General Checking and Adjusting Procedure, page 3) and check projection resolving power (with refence to General Checking and Adjusting Procedure, page 6).
■Assemble up ④—⑨.

Back washer

2551-1385	t=0.05
2551-1386	t=0.07
2551-1387	t=0.1
2551-1388	t=0.2
2551-1389	t=0.5

Coupler-level-adjusting washer

2551-1391	t=0.05
2551-1392	t=0.07
2551-1393	t=0.1
2551-1394	t=0.2
2551-1395	t=0.5

■Focus shift and flange back

f(mm)	f'F(mm)
35	44.56～44.62
50	44.56～44.71
70	
105	

■Allowable projection resolving powers for servicing

f(mm)	投影距離 D(m)	Center (y'=0)	y'=15 S像	y'=15 M像
35	1.2～1.9	100	25	25
70	2.0～3.6			
105	2.5～5.3			

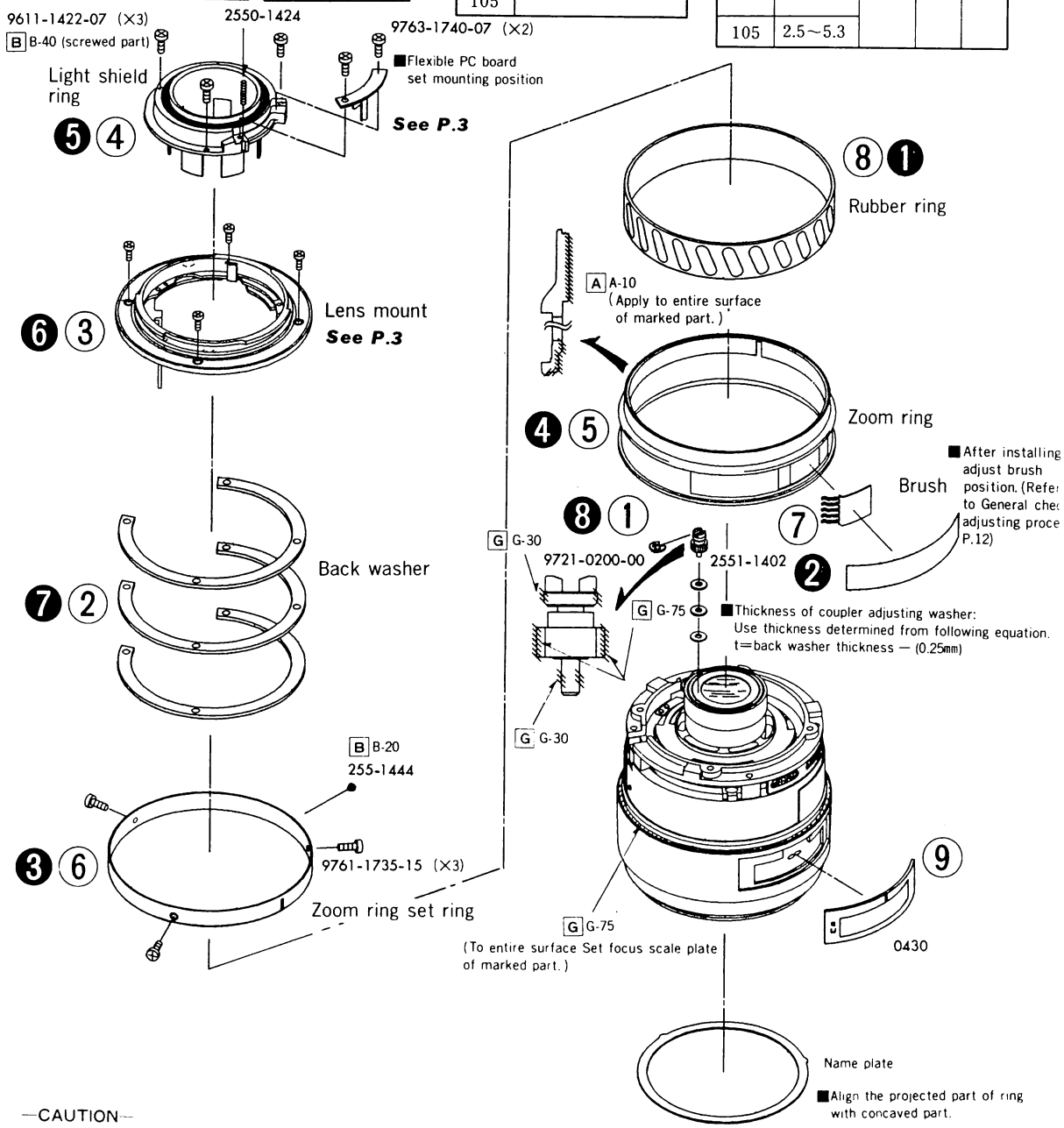

—CAUTION—

Use PROGRAM PACK Ver. 6.3 or newer for Camera I O Tester.

Scan Copyright 2006, P.Ganzel

■Lens movement

- Although this zoom lens is basically 3-component (positive, negative, positive) type, this lens is actually 4-component mechanical compensation type wherein 3rd component is splited and distortion in zooming is compensated by non-linear motion among the splited components.
  By rotating 2-ring type zoom ring, 1st and 4th lens groups are moved together, 3rd lens group moved individually and 2nd lens group fixed.

■Diaphragm parts move together with 3rd lens group and fullaperture F-value is variable in the range of 3.5 to 4.5. (F=3.5 for f=35mm, F=4.5 for f=105mm)

- For focusing lens group (1st lens group) is moved by rotating AF coupler or focusing ring.
- Similarly to focusing, macro focusing is effectied by turning focusing lens group. Maximum magnification ratio is 1 : 6.5 subject to f=105mm, focus scale D=0.85.

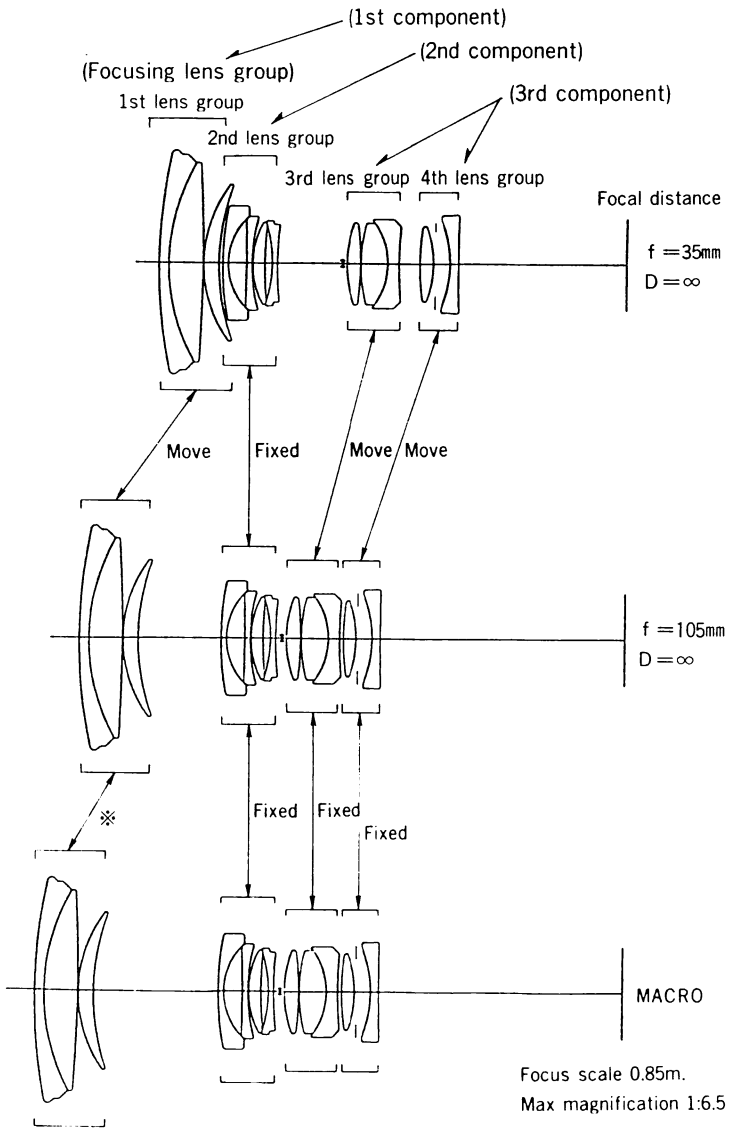

※AF coupler or focusing ring is turned.

Scan Copyright 2006, P.Ganzel

Code No. 2585-100
Code No. 2585-600

■Circuit diagram and wiring diagram

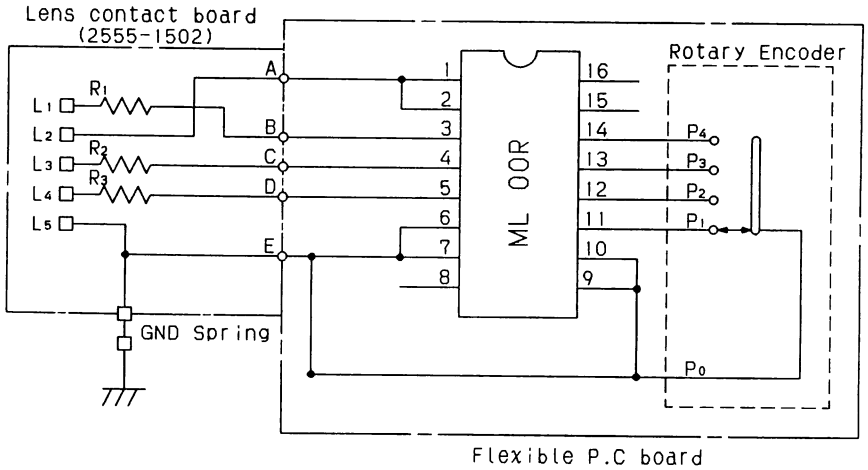

$L_1 \sim L_5$: Electric signal contacts
$R_1 \sim R_3$: Printed resistor
ML 00R : ROM-IC
A~E : Soldered part of signal PC board, flexible PC board
$P_0 \sim P_4$: Rotary encoder pattern switch
(ON-OFF change by zooming)

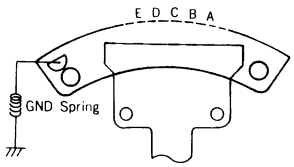

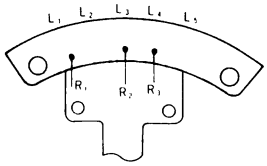

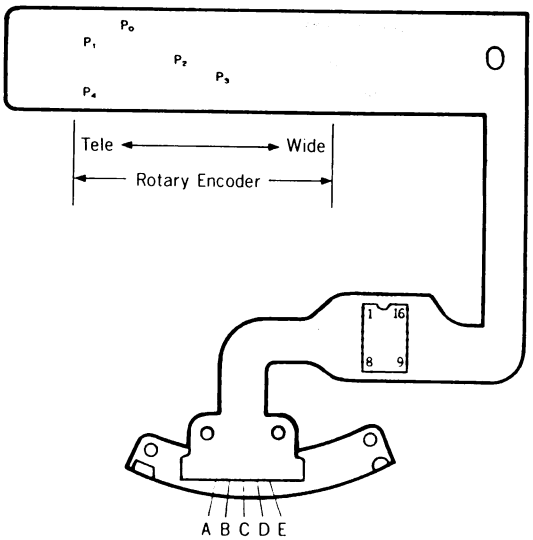

Scan Copyright 2006, P.Ganzel